A	B	C	D	E	F	G	H	COLUMNS	POWER
12'-0"	6'-0"	7'-9 1/2"	1 1/4"	3'-0"	9'-0"	8'-0"	24'-0"	W10 X 22	REFERENCE 01-8124-85-1

DIMENSIONS

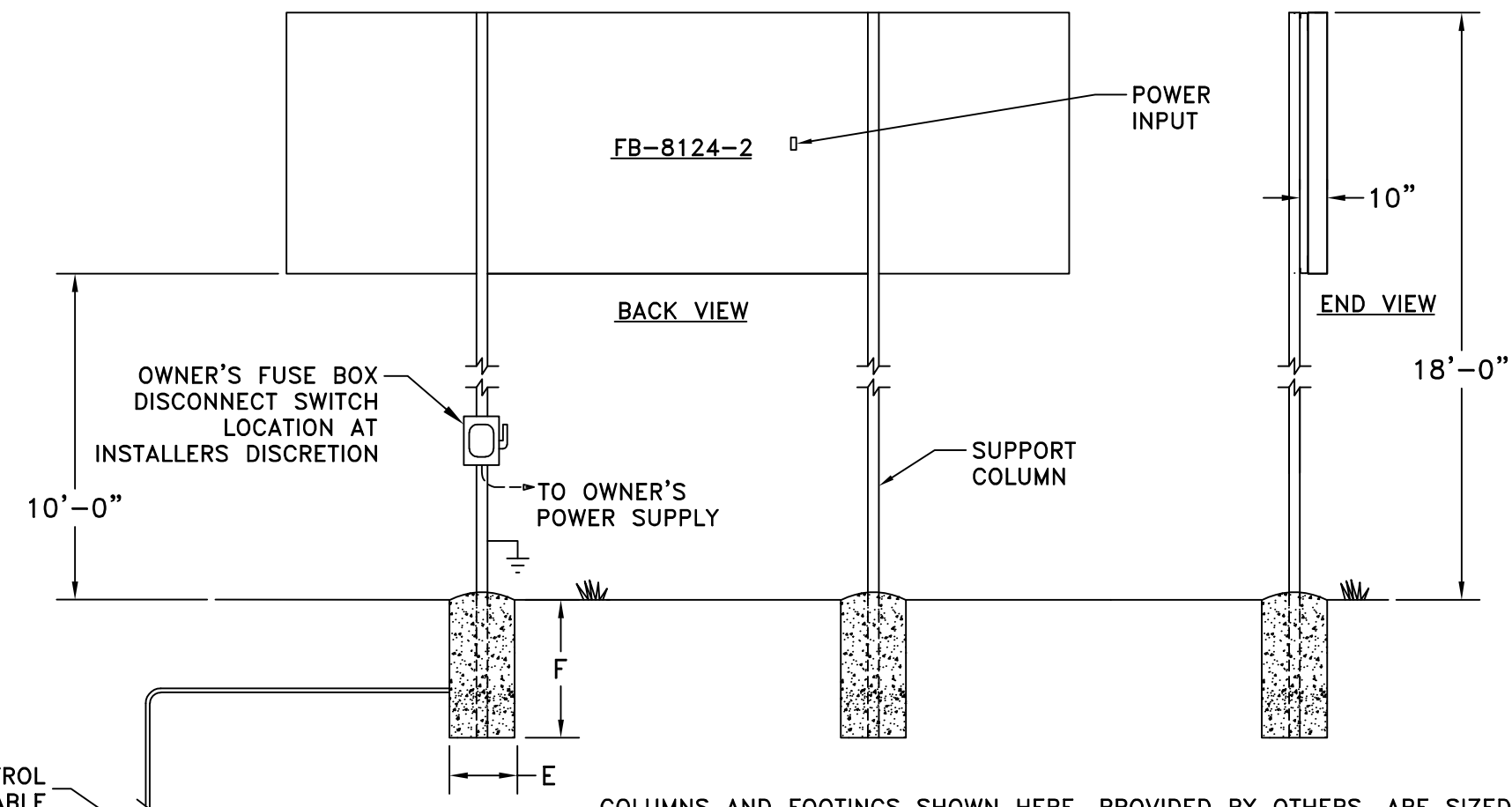

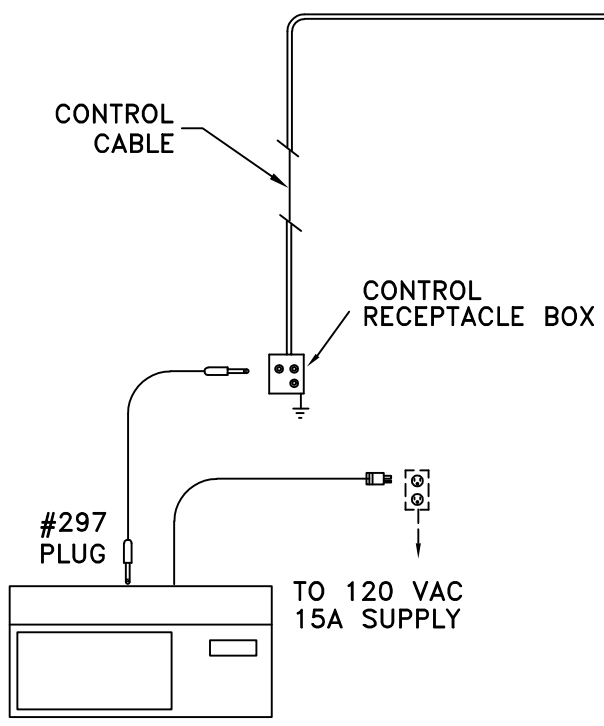

SCBD CONTROL

COLUMNS AND FOOTINGS SHOWN HERE, PROVIDED BY OTHERS, ARE SIZED TO COMPLY WITH IBC 2006 90 MPH EXPOSURE B REQUIREMENTS. THE MANUFACTURED PRODUCT EXCEEDS THE REQUIREMENTS OF IBC 2006 90 MPH EXPOSURE B AS MOUNTED HERE. DESIGN SHOULD BE ALTERED FOR DIFFERENT SOIL CONDITIONS, CLEARANCE, OR LOCAL CODES. FAIR-PLAY ASSUMES NO RESPONSIBILITIES FOR INSTALLATIONS DONE BY OTHERS.

CONTROL CABLES- SUGGEST 1/2" CONDUIT BE USED FOR BURIED CABLE IN AREAS WHERE IT MAY BE SUBJECT TO MECHANICAL DAMAGE. POWER WIRES SHOULD BE ROUTED IN SEPARATE CONDUIT FROM CONTROL CABLE.

INSTALLATION DRAWING SHOULD BE REVIEWED AND APPROVED BY A LICENSED PROFESSIONAL ENGINEER IN YOUR AREA PRIOR TO CONSTRUCTION.

* REFERENCE 01-0500-01 FOR INSTALLATION NOTES.

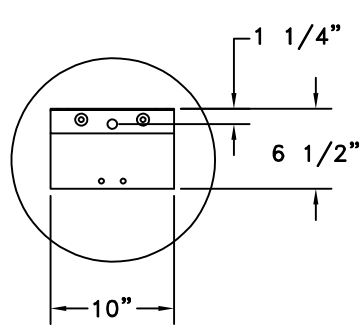

DETAIL A
STANDARD J BRACKET

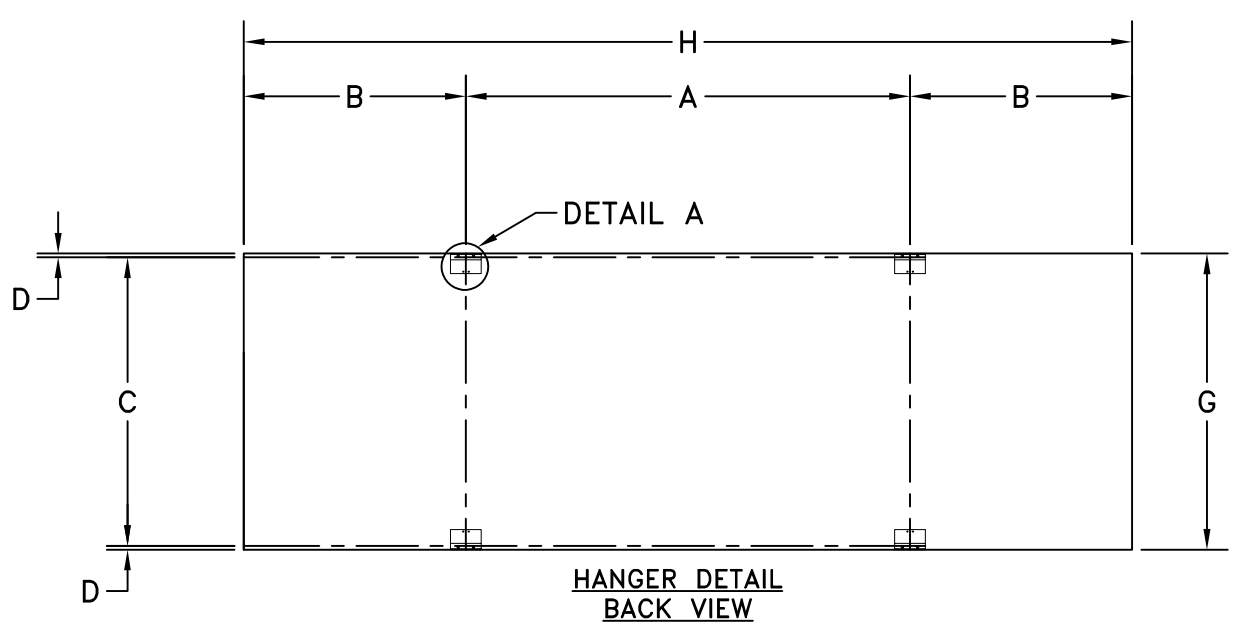

HANGER DETAIL
BACK VIEW

CUSTOMER APPROVAL:	MY SIGNATURE BELOW SIGNIFIES MY APPROVAL TO PROCEED WITH THE DESIGN WORK SPECIFIED HEREIN AND ACKNOWLEDGEMENT THAT I HAVE RECEIVED AND READ THE INSTALLATION SPECIFICATIONS CONTAINED IN FAIR-PLAY DOCUMENT NO. 01-0500-01. CONSULT YOUR FAIR-PLAY SALES ASSOCIATE IF YOU SHOULD HAVE ANY QUESTIONS OR REQUIRE ANY CHANGES TO THIS DOCUMENT.	
PROJECT:	SIGNATURE:	DATE:
REFERENCE #:	PRINT NAME:	

FAIR-PLAY

6110 AVIATOR DRIVE
HAZELWOOD, MO 63042

THIS DOCUMENT CONTAINS FAIR-PLAY PROPRIETARY INFORMATION. ANY DISCLOSURE, USE OR DUPLICATION OF THE DOCUMENT OR OF ANY INFORMATION CONTAINED THEREIN FOR OTHER THAN THE SPECIFIC PURPOSE FOR WHICH IT WAS DISCLOSED IS EXPRESSLY PROHIBITED, EXCEPT AS MAY BE OTHERWISE AGREED TO IN WRITING. COPYRIGHT 2022.

TITLE INSTALLATION FOR FB-8124-2

DRAWN BY BEW
DATE 10-18-17
SCALE 3/16"=1'-0"
B
MODEL FB-8124-2
DWG. NO. 01-8124-85-2

REV.#	CHANGE	DATE	BY
A	UPDATED TITLE BLOCK FORMAT	08-10-22	BEW
OR	ORIGINAL RELEASE	10-18-17	BEW